International Journal of Engineering Trends and Technology
ISSN: 2231-5381/ https://doi.org/10.14445/22315381/IJETT-V74I11P128

Volume 74 Issue 11, 443-450, November 2026
© 2026 Seventh Sense Research Group®

Original Article

Saving Electricity Consumed in the Ore Crushing Process through the Generation of Reactive Power

Marinka Baghdasaryan[1], Eduard Hakobyan[2], Davit Davtyan[3]

[1,2,3]*National Polytechnic University of Armenia, Institute of Energetics and Electrical Engineering, Yerevan, Armenia*.

[1]*Corresponding Author: m.baghdasaryan@seua.am*

Received: 06 May 2026 Revised: 18 September 2026 Accepted: 26 September 2026 Published: 25 November 2026

Abstract *- A method for reducing electricity consumption in ore crushing processes is proposed, based on an information control algorithm that highlights the efficiency and practical potential of the approach. Ore crushing operations rely heavily on inductive loads that consume substantial reactive power. To address this issue, an effective and cost-efficient reactive power compensation strategy is developed, utilizing the reactive power generated by existing synchronous motors within the production cycle. By connecting these motors to a common busbar, the generated reactive power in the crushing plant is transmitted to the high-voltage substation busbar and redistributed to asynchronous motors. Unlike conventional methods, this energy-saving strategy eliminates the need for major technical re-equipment, requiring only an upgrade to the synchronous motor excitation current control system. The proposed solution offers a scalable and low-cost approach for optimizing energy consumption across various energy-intensive industrial processes.*

Keywords *- Compensation, Information algorithm, Correlation, Reactive power, Bus.*

1. Introduction

Considering energy conservation issues and their effective solutions is particularly important for energy-intensive industrial enterprises. Mining enterprises are characterised by high energy consumption. Energy conservation within the ore crushing process is of particular scientific and technical interest, especially since it is unpredictable due to its operation under randomly varying dynamic loads [1, 2].

The machines used in the grinding process are driven by powerful electric motors that operate under random load fluctuations. Therefore, achieving efficient energy use is a multifaceted and complex task. The choice of energy-saving methods and means is primarily determined by the technological characteristics of the processes carried out at a given industrial facility and the operating modes of the energy consumers involved [3-7]. A large number of studies have been published on energy conservation in ore crushing. A review of existing literature reveals the most interesting of these studies.

The authors of [8] achieved energy savings of 21.44% by modifying the tungsten crushing process. This was accomplished by employing a two-stage continuous classification system within a single-stage crushing circuit. Work [9] proposes reducing the wear of ore crusher components as a means of saving energy. A mathematical model of a cone crusher was developed, and a simulation experiment was conducted. The dependence of the crusher electric motor's current and power on the feeder's power was determined. [10] suggested reducing the mill's specific energy consumption by utilising the technological process's maximum load. Various studies have confirmed the effectiveness of using the reactive power compensation capabilities of synchronous motors for reactive power consumers [11-13]. Of particular interest is the mathematical model for optimally distributing the reactive power generated by synchronous motors. This ensures a power factor close to unity on the common power bus and minimises the total active power losses of motors generating reactive power [13].

An analysis of existing energy conservation studies shows that they require improvement. This is due to the irregularity of changes in technological and energy factors in the process and the diversity of technological mechanisms used, whose operating modes are dynamic. Furthermore, the crushers, pumps and classifiers used in the process are driven by asynchronous motors, which consume significant amounts of reactive power. Large amounts of reactive power lead to a decrease in the power factor (cosφ), resulting in increased current in the electrical network and increased energy losses in transmission lines and transformers, as well as deteriorating voltage quality. This is why reactive power compensation is important in modern energy systems, the main goal of which is to save electricity.

This is an open access article under the CC BY-NC-ND license (http://creativecommons.org/licenses/by-nc-nd/4.0/)

This paper proposes the use of objective information about the behaviour of the mechanisms and energy consumers used in the ore crushing process, and the corresponding distribution of reactive power generated by synchronous electric motors, to compensate for reactive power consumed in the process.

2. Materials and Methods

There are general methods for saving energy during the ore crushing process. The practical application of these methods is determined by the energy consumers used, the technological mechanisms and the energy-technological indicators [14]. Figure 1 shows the design for saving energy during the crushing process.

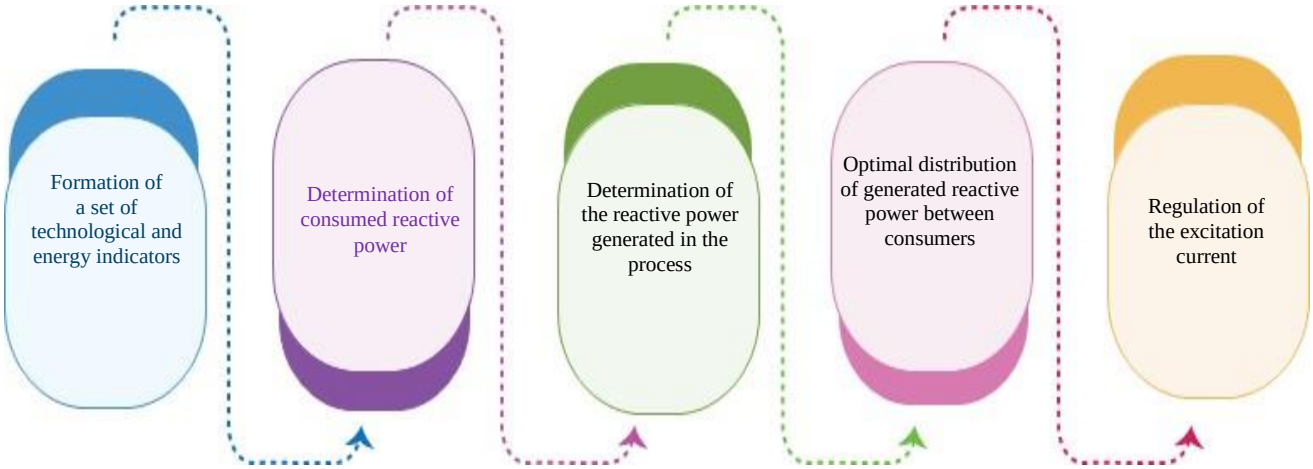

Fig. 1 Energy-Saving algorithm for grinding processes

To obtain objective information on the energy consumption of the process under consideration, the process flow diagram is analysed as a series of interconnected units. The algorithm for monitoring and analysing process and energy indicators encompasses crushing, grinding, classification and mash pumping operations [15]. To assess the behaviour of the operations comprehensively, the input and output factors that influence energy consumption are identified. Table 1 presents the controlled operational factors. The degree to which each factor influences power consumption is assessed using a standardised scale of regression equations [16-18].

Table 1. Control of factors by action

No	Operation name	Controllable input factors affecting electricity consumption	Controlled output parameters that affect power consumption.
1	Crushing	Productivity, Q_{cr} Crushed ore size, D_{cr}	Power consumption of crusher,P_d
2	Grinding	Size of the ore being crushed, D_g Specific gravity of the ore, δ mill filling factor, K	Power consumption of the mill, P_M
3	Classification	Crushed ore classification performance, Q_c	Classifier power consumption, P_k
4	Sludge pumping	Mash density, γ Pressure height, H Pump capacity, Q_N	Pump power consumption, P_N

In order to analyse and identify visually the patterns of change in electricity consumption visually, the influence of the following indicators on the average shift load was considered:

Q_{med} is the average productivity of finished products,

$P_{\Sigma cr}$ is the total installed power of the crushers' electric drive motors, $P_{\Sigma g}$ is the total installed power of the mills' electric drive motors,

$P_{\Sigma C}$ is the total installed power of the classifiers' electric drive motors,

$P_{\Sigma p}$ is the installed total power of the slurry pumps' electric drive motors.

Correlation coefficients were obtained between the average shift loads during crushing, grinding, sorting and slurry pumping, as well as with each of the above indicators: The correlation coefficients [18] are determined by`

$r_{pp} = \frac{R_{pp}}{\sigma_p^2}$, $r_{pq} = \frac{R_{pq}}{\sigma_p \sigma_q}$, $r_{pr} = \frac{R_{zr}}{\sigma_p \sigma_r}$, $r_{pv} = \frac{R_{pv}}{\sigma_p \sigma_v}$, $r_{pb} = \frac{R_{pb}}{\sigma_p \sigma_b}$, $r_{pz} = \frac{R_{pz}}{\sigma_p \sigma_z}$,

where

$R_{pp} = \frac{1}{\ell}\sum_1^\ell p(t)p(t+\tau)$, $R_{pq} = \frac{1}{\ell}\sum_1^\ell p(t)q(t+\tau)$,

$R_{pr} = \frac{1}{\ell}\sum_1^\ell p(t)r(t+\tau)$, $R_{pv} = \frac{1}{\ell}\sum_1^\ell p(t)v(t+\tau)$,

$R_{pb} = \frac{1}{\ell}\sum_1^\ell p(t)b(t+\tau)$, $R_{pz} = \frac{1}{\ell}\sum_1^\ell p(t)z(t+\tau)$,

$\sigma_p = \sqrt{\frac{1}{\ell-1}\sum_1^\ell (p_i - \overline{p})^2}$, $\sigma_q = \sqrt{\frac{1}{\ell-1}\sum_1^\ell (q_i - \overline{q})^2}$,

$\sigma_r = \sqrt{\frac{1}{\ell-1}\sum_1^\ell (r_i - \overline{r})^2}$, $\sigma_v = \sqrt{\frac{1}{\ell-1}\sum_1^\ell (v_i - \overline{v})^2}$,

$\sigma_b = \sqrt{\frac{1}{\ell-1}\sum_1^\ell (b_i - \overline{b})^2}$, $\sigma_z = \sqrt{\frac{1}{\ell-1}\sum_1^\ell (z_i - \overline{z})^2}$,

$\tau = (0,1,2,\dots,\ell)\Delta t$,

Δt is the time interval.

The following designations were used:

$p = P_{med}$, $q = Q_{med}$, $r = P_{\Sigma cr}$, $v = P_{\Sigma g}$, $b = P_{\Sigma C}$, $z = P_{\Sigma p}$.

The relationship between the average load during work shifts and the throughput of finished products, as well as the power of the operating motors of crushers, mills, classifiers and slurry pumps, is analysed. This is achieved by evaluating the sign and magnitude of the correlation coefficient.

A change in mill load during the crushing process leads to a change in generated reactive power, causing a change in the set power factor level of the power supply network. Since synchronous and asynchronous motors of different power ratings are used in the ore crushing process, reactive power compensation is performed to maintain the required cosφ level.

To establish the required power factor, each motor's operational state is analyzed, thereby defining the output power generated by the synchronous machine. The optimal allocation of this generated reactive power among consumers depends on their specific operating regimes and their point of connection to the main substation busbar (Figure 2).

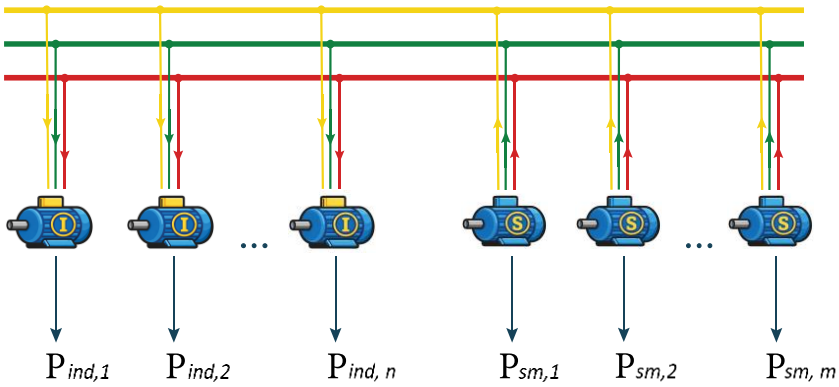

Fig. 2 Connection diagram showing synchronous and asynchronous motors connected to a common grid bus

When evaluating the reactive power demand of induction motors, both the efficiency and power factor of each i- th unit are considered as functions of its output mechanical power. To generate the necessary reactive power $Q_{sm,j}$ from the j- th synchronous motor, the motor excitation current is determined to ensure its regulation.

3. Results and Discussion

The proposed algorithm was tested using the crushing circuit. This example circuit includes:

- One ore grinder with a 600 kW electric motor;
- One crusher with a 200 kW electric motor;
- Two classifiers with 75 kW and 15 kW electric motors, respectively;
- Two slurry pumps with 10 and 13 kW motors, respectively.

In the example under consideration, the experimental values for the motors' power consumption were taken from real-time records compiled by the Kajaran Copper and Molybdenum Plant (Figure 3).

Table 2 presents the root mean square deviations and correlation coefficients obtained for the example under consideration.

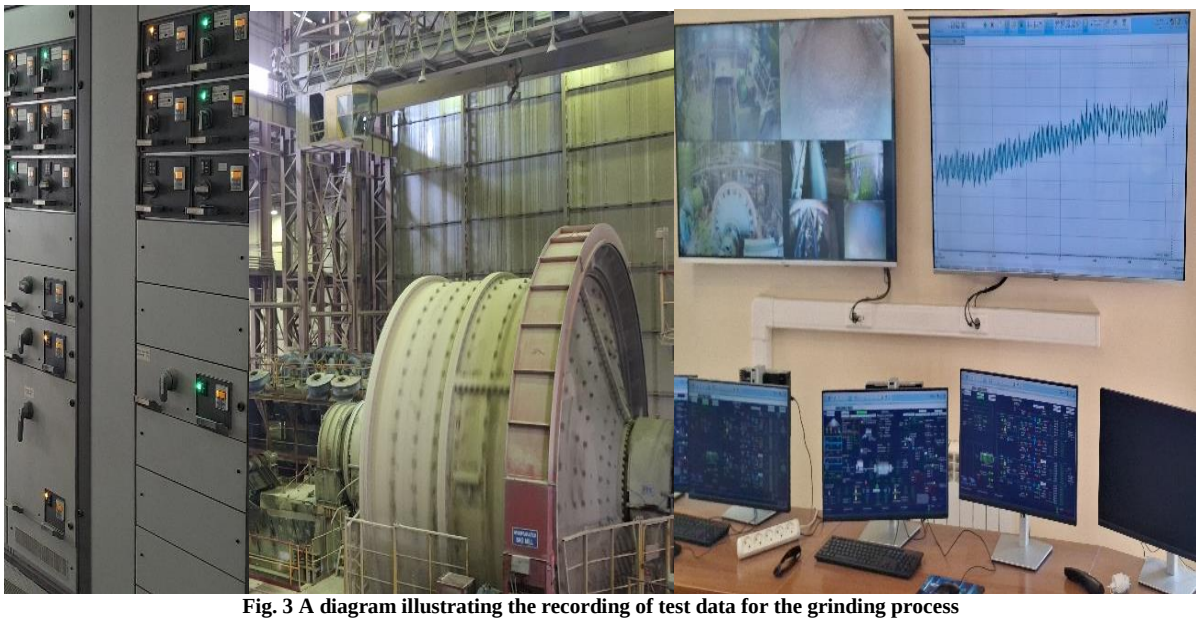

Fig. 3 A diagram illustrating the recording of test data for the grinding process

Table 2. Experimental data table

No	P_{av}(kW)	Q_{av} (t/h)	P_{cr}(kW)	P_g (kW)	P_{C1}(kW)	P_{C2}(kW)	P_{p1} (kW)	P_{p2} (kW)
1	791	58	180,5	550	13.5	71.5	17.0	11.5
2	781	55	178	560	13.8	73.7	15.2	12.0
3	730	51	178	490	12.9	72.0	15.1	12.1
4	721.5	58,2	181	480	14.0	72.8	16.1	12.4
5	778	60	163	560	14.1	72.4	12	11.0
6	730.6	52.6	173	505	13.9	73.1	13.8	10.8
7	733.2	53.7	169	508	14.2	74.0	15.8	10.9
8	683.1	52.1	158	470	11.5	73.7	14.6	10.6
9	736.9	56.8	171	510	12.8	72.0	14.9	11.0
10	821.5	57.8	183	576	12.7	71.9	17.6	12.9
11	751.3	54.3	169	520	13.4	71.2	16.3	11.9
12	818.4	59	193	565.6	13.8	73.4	16.6	11.4
13	716.3	56.2	178	480.8	14.3	71.6	15.1	12.2
14	790.6	52.6	176	490	14.2	74.0	15.8	11.9
15	805.7	53	196	520	13.8	73.6	16.7	12.4
Average	759.27	55.35	176.43	519.03	13.53	72.73	15.51	11.67

Based on the power consumption values of the motors in the circuit under consideration, the standard deviations and correlation coefficients were obtained (Table 3).

If the correlation coefficient is close to one, there is a strong linear dependence; if it is close to zero, there is no linear dependence.

Table 3. Data on standard deviations and correlation coefficients has been calculated

$\sigma_{P_{av}}$	$\sigma_{Q_{av}}$	σ_{cr}	σ_g	σ_{C1}	σ_{C2}	σ_{p1}	σ_{p2}
41.690	3.795	10.062	35.058	0.496	2.597	1.394	0.695
r_{pp}	r_{pQ}	r_{pcr}	r_{p_g}	r_{pC1}	r_{pC2}	r_{pp_1}	r_{pp_2}
0.010	0.920	0.669	0.787	0.380	0.520	0.125	0.092

As shown in Figure 4, the single-phase grinding circuit uses five asynchronous motors and one synchronous motor to operate the machinery and transport the resulting slurry. The reactive power requirements of the circuit's consumers and the reactive power generated were assessed (see Table 4).

The findings demonstrate that the reactive power produced by the synchronous motor completely satisfies system demand. Furthermore, the supply busbar power factor was evaluated across a range of load conditions.

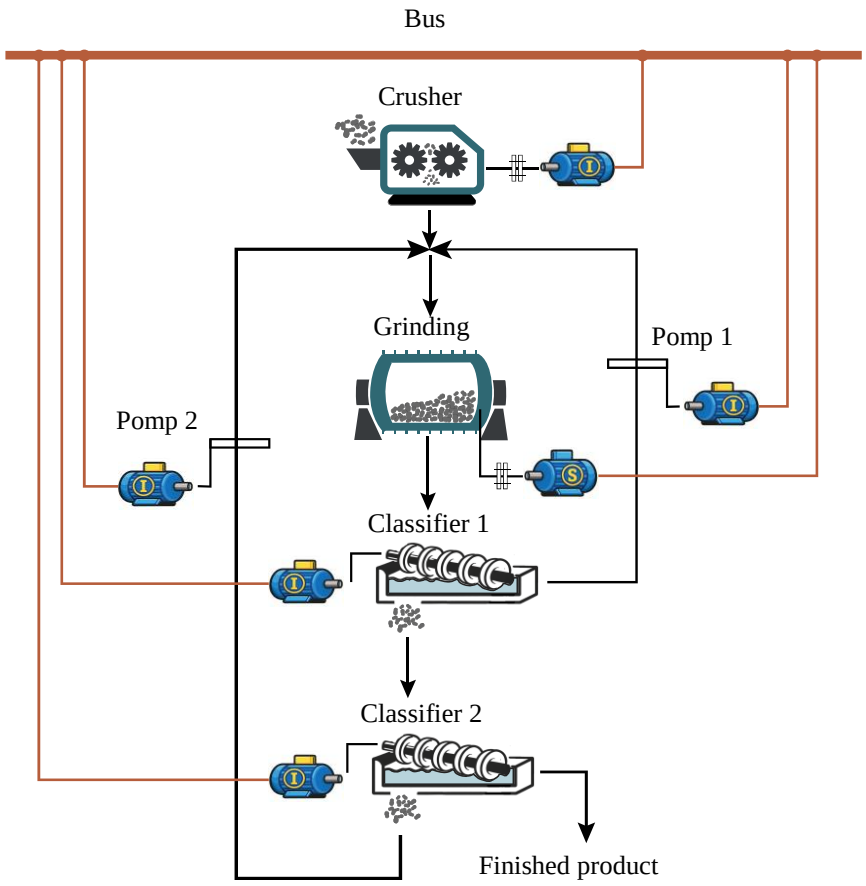

Fig. 4 Topology of the grinding circuit

Table 4. Data calculated for the circuit under consideration

Motors	Quantity	Nominal active power P_N(kW)	Nominal reactive power Q_N (kVar)	$cos\,\varphi$
Pump 1	1	10	6.50	0.84
Pump 2	1	13	6.74	0.85
Classifier 1	1	15	7.93	0.88
Classifier 2	1	75	37.25	0.89
Crusher	1	200	129.52	0.84
Grinding mill	1	600	-224.52	0.95
Total System	6	913	-36.58	0.993

For asynchronous motors, the total power factor will be:

$$cos\,\varphi_{ind} = \frac{\Sigma I_{ind,a}}{\sqrt{\Sigma(I_{ind,a})^2+\Sigma(I_{ind,r})^2}} \quad (1)$$

For synchronous motors, the total power factor will be:

$$cos\,\varphi_{sm} = \frac{\Sigma I_{sm,a}}{\sqrt{\Sigma(I_{sm,a})^2+\Sigma(I_{sm,r})^2}} \quad (2)$$

The total power factor on the power bus is determined by Equation (3):

$$\sum^{\Sigma} \frac{\Sigma I_{ind,a}+\Sigma I_{sm,a}}{\sqrt{\left(\Sigma I_{ind,a}+\Sigma I_{sm,a}\right)^2+\left(\Sigma I_{ind,r}+\Sigma I_{sm,r}\right)^2}} cos \quad (3)$$

Where $I_{ind,a}$ and $I_{ind,r}$ are the active and reactive currents of the stator winding of an asynchronous motor, respectively. $I_{sm,a}$ and $I_{sm,r}$ are the active and reactive currents of the stator winding of a synchronous motor.

To ensure effective distribution of reactive power generated across operating synchronous units, three operational constraints must be fulfilled:

1. Active loss reduction: The reactive power supplied by the plant's synchronous machines to compensate for induction motor demands and auxiliary loads should be allocated to minimize aggregate system active power losses
2. Efficiency thresholds: Operating conditions for each reactive power-generating synchronous motor must preserve efficiency at or above rated baseline values.
3. Grid power factor target: The combined operational mode should maintain an overall power factor approaching unity at the primary substation bus.

Accordingly, the mathematical optimization model for reactive power allocation can be formulated as:

$$min\, F\,(Q_{sm}) = \sum_{j=1}^{m} \lambda_j (Q_{sm}) \qquad (4)$$

subject to constraints:

$$\sum_{i=1}^{n} Q_{ind,i} \le \sum_{j=1}^{m} Q_{sm,j},$$

$$0.98 \le cos\, \varphi_{bus}\,(Q_{sm}) \le 1.0,$$

where $Q_{sm} = \left[Q_{sm,1}, Q_{sm,2}, \ldots, Q_{sm,m}\right]^T$ represents the vector of reactive power outputs from the m synchronous units, and λ_j denotes the relative active power loss factor associated with the j-th motor's reactive generation.

For the *j*-th synchronous motor, the relative active-power loss is determined as follows:

$$\lambda_j = \frac{\Delta P_{sm,j}}{Q_{sm,j}}$$

The following notation is used:

$Q_{sm,j}$ denotes the reactive power capacity of the j- th synchronous motor;

$\sum_{i=1}^{n} Q_{ind,i}$ represents the total reactive power demanded by the n operating induction motors; $cos\, \varphi_{bus}$ refers to the resulting power factor at the main supply busbar; $\Delta P_{sm,j}$ stands for the active power losses incurred in the j-th synchronous unit.

Solving the optimization scheme in Equation (4) yields the precise reactive power output required from each synchronous drive. This strategy guarantees minimal total internal active power dissipation while optimizing the power factor on the main feeder. Once the target reactive power levels are calculated, the corresponding excitation currents for individual synchronous machines are adjusted accordingly.

Based on the circuit configuration in Figure 4 and diverse operational parameters, the optimal reactive power output generated by the synchronous motor was calculated to maintain a near-unity power factor at the main substation busbar (Table 5). The analysis shows that the total active power losses are very small. Applying different technological factors to the supply bus can achieve a power factor greater than 0.99.

Table 5. Data calculated for the circuit under consideration

Operating Process Parameters			**Optimum Generated Reactive Output**	**Relative active power losses, $\sum_{j=1}^{m} \lambda_j$**	**Resultant power factor $cos\, \varphi_{bus}$**
$\delta\left(\frac{t}{m^3}\right)$	K(p.u.)	$\gamma\left(\frac{t}{m^3}\right)$	$Q_{opt}(kVar)$		
2.4	0.5	2.7	224.50	0.38	0.993
2.4	0.35	2.7	224.50		
2.8	0.5	3.2	254.85		
2.8	0.35	3.2	254.85		

A comparative analysis was conducted to evaluate the practical viability and cost-effectiveness of the proposed excitation control method against conventional reactive power compensation technologies, specifically Static Capacitor Banks (SCBs) and Static Synchronous Compensators (STATCOMs) [19, 20]. Table 6 summarizes the economic payback, operational flexibility, and capital investment requirements for each system.

Although conventional SCBs are a relatively inexpensive initial solution, they provide stepped (non-smooth) regulation, are susceptible to failure under harmonic-rich mining loads and have reduced compensation capacity during voltage dips. Although STATCOM installations provide a superior, fast, continuous, dynamic response and harmonic resilience, their extremely high cost negatively impacts the payback period for energy-intensive industrial facilities.

In contrast, the proposed excitation control algorithm utilizes existing synchronous motors in the ore crushing line, eliminating the need for major capital expenditures or additional physical infrastructure. Implementation only requires updating the control logic of the excitation system.

Consequently, this approach provides an almost immediate economic return while offering continuous dynamic reactive power regulation and eliminating the risk of harmonic resonance.

Table 6. Comparative performance of reactive power compensation methods

Parameter	Conventional capacitor banks (SCBs)	STATCOM systems	Proposed synchronous motor excitation control
Capital expenditure	Low	Very High	Minimal (utilizes existing industrial motors)
Operational expenditure	Low to moderate (frequent maintenance, aging)	Moderate (cooling and power electronics loss)	Very Low (software/control algorithm integration)
Dynamic response and control	Discrete / Stepwise	Continuous and fast dynamic response	Continuous, dynamic, smooth
Harmonic and resonance risk	High risk of grid resonance	Low	No resonance risk
Estimated payback period	1.5 - 2.5 years	3.5 - 5.0 years	< 0.5 years

4. Conclusion

Unlike the recommendations of other authors, the obtained results allow for the avoidance of unnecessary reactive power consumption, the efficient use of electricity generated in the production shop and consideration of all process parameters and operating modes of energy consumers. The developed algorithm quantitatively assesses consumer power, enabling the identification of potential energy savings through the objective collection of information on the energy and process parameters of the grinding process. Consequently, optimal decisions can be made regarding the generated reactive power and its distribution among consumers.

The comments presented suggest significant potential for the further development of these results, particularly in relation to their application in various energy-intensive processes. In future research will explore the potential of machine learning to improve the efficiency of reactive power distribution generated by a synchronous motor.

Conflicts of Interest

The authors declare that they have no known competing financial interests or personal relationships that could have appeared to influence the work reported in this paper

Funding Statement

This work was carried out by the basic laboratory "Electrical engineering and electro-radio materials" of the national polytechnic university of armenia, funded by the Higher Education and Science Committee of MESCS RA.

References

[1] Gauti Asbjörnsson, "*Crushing Plant Dynamics*," Doctoral Thesis, Published and Distributed by Chalmers University of Technology, pp. 1-197, 2015. [Google Scholar] [Publisher Link]

[2] Gauti Asbjörnsson, Erik Hulthén, and Magnus Evertsson "Modelling and Simulation of Dynamic Behaviour in Crushing Plants," *Minerals Engineering*, vol. 43-44, pp. 112-120, 2023. [CrossRef] [Google Scholar] [Publisher Link]

[3] Salim Adolfo Giha Yidi et al., "Comparison of Reactive Power Compensation Methods in an Industrial Electrical System with Power Quality Problems," *Electricity*, vol. 5, no. 3, pp. 642-661, 2024. [CrossRef] [Google Scholar] [Publisher Link]

[4] Sohibjon G'ulom O'g'li Shirinov et al., "Analysis of Patterns of Electricity Consumption in Mining and Processing Enterprises," *Vibroengineering Procedia*, vol. 54, pp. 308-315, 2024. [CrossRef] [Google Scholar] [Publisher Link]

[5] Xiaoquan Lu et al., "Energy Efficiency Measurement of Mechanical Crushing based on Non-Contact Identification Method," *Symmetry*, vol. 16, no. 7, pp. 1-11, 2024. [CrossRef] [Google Scholar] [Publisher Link]

[6] Jan de Bakker, "Energy Use of Fine Grinding in Mineral Processing," *Metallurgical and Materials Transactions E*, vol. 1, no. 1, pp. 8-19, 2013. [CrossRef] [Google Scholar] [Publisher Link]

[7] Ahmed Abdulmula, Kamaruzzaman Sopian, and Lim chin Haw, "Power Consumption Modeling based on Real-Time Data Traffic for Balancing Power Supply and Energy Demand to Develop Green Telecommunication Tower: A Case Study," *Engineering, Technology and Applied Science Research*, vol. 9, no. 3, pp. 4159-4164, 2019. [CrossRef] [Google Scholar] [Publisher Link]

[8] Caibin Wu et al., "Energy Saving and Grinding Circuit Optimization in Tungsten ore Processing Plant through High Pressure Grinding Rolls and one Stage Grinding Design: An Industrial case Study," *Minerals Engineering*, vol. 227, 2025. [CrossRef] [Google Scholar] [Publisher Link]

[9] Natalia Vasilyeva, Uliana Golyshevskaia, and Aleksandra Sniatkova, "Modeling and Improving the Efficiency of Crushing Equipment," *Symmetry*, vol. 15, no. 7, pp. 1-11, 2023. [CrossRef] [Google Scholar] [Publisher Link]

[10] Svetlana Starykh et al., "Realisation of Energy Saving Potential at Mining Enterprises on the Basis of Optimal Intramill Filling," *E3S Web of Conferences*, vol. 548, pp. 1-9, 2024. [CrossRef] [Google Scholar] [Publisher Link]

[11] Roman Belyaevsky, Vladimir Efremenko, and Fedor Nepsha, "Features of Reactive Power Compensation in Electrical Networks of Coal Open Pit Mines," *9th China-Russia Symposium" Coal in the 21st Century: Mining, Intelligent Equipment and Environment Protection*, vol. 176, pp. 198-201, 2018. [CrossRef] [Google Scholar] [Publisher Link]

[12] Ahmed A. AbdElhafez et al., "Reactive Power Problem and Solutions: An Overview," *Journal of Power and Energy Engineering*, vol. 5, no. 5, pp. 40-54, 2017. [Google Scholar]

[13] Sushank jambhulkar, and Ramchandra adware, "Technologies Compensating Reactive Power: A Review," *International Research Journal of Engineering and Technology*, vol. 5, no. 4, pp. 817-822, 2018. [Publisher Link]

[14] Sergio Alvarado et al., "Energy-Exergy Optimization of Comminution," *Energy*, vol. 23, no. 2, pp. 153-158, 1998. [CrossRef] [Google Scholar] [Publisher Link]

[15] Anne J. Whitworth et al., "Review on Advances in Mineral Processing Technologies Suitable for Critical Metal Recovery from Mining and Processing Wastes," *Cleaner Engineering and Technology*, vol. 7, pp. 1-16, 2022. [CrossRef] [Google Scholar] [Publisher Link]

[16] Kalandarov U. Kh, and Eshimova F.K, "Regression Model in A Standardized Scale," *Academic Journal of Digital Economy and Stability*, vol. 38, no.3, pp. 307-316, 2025. [Google Scholar] [Publisher Link]

[17] Rudolf J. Freund, and William J. Wilson, *Statistical Metahods*, 2nd ed, Academic Press, 2003. [Google Scholar] [Publisher Link]

[18] Jacob Cohen, *Statistical Power Analysis for the Behavioral Sciences*, 2nd ed, Erlbaum: Hillsdale, MI, USA, 1988. [Google Scholar] [Publisher Link]

[19] Xiao-Ping Zhang, Christian Rehtanz, and Bikash Pal, *Flexible AC Transmission Systems: Modelling and Control*, 1st ed, Springer, pp. 139-188, 2012. [CrossRef] [Google Scholar] [Publisher Link]

[20] Alexander Eigeles Emanuel, *Power Definitions and the Physical Mechanism of Power Flow*, John Wiley and Sons, 2010. [CrossRef] [Google Scholar] [Publisher Link]