International Journal of Engineering Trends and Technology
ISSN: 2231-5381/ https://doi.org/10.14445/22315381/IJETT-V74I11P119

Volume 74 Issue 11, 267-274, November 2026
© 2026 Seventh Sense Research Group®

*Review Article*

# Phase Locked Loop and Fuzzy Logic: A Comprehensive Review

R. Gogoi[1], G. Konwar[2], T. Bezboruah[3]

[1,2,3]*Department of Electronics and Communication Technology, Gauhati University, Assam, India.*

[1]*Corresponding Author: rickygogoi@gauhati.ac.in*

Received: 23 July 2026 Revised: 17 September 2026 Accepted: 17 September 2026 Published: 25 November 2026

***Abstract*** *- The phase locked loop is a feedback control system particularly used in communication systems for locking frequency and enhanced performances of the system. After development of the concept of fuzzy logic and its application, it revolutionized in the field of communication systems. To improve accuracy, fuzzy concept is implemented in complex and bulky systems in communication systems. The fusion of fuzzy logic and phase locked loop gives better performance as compared to the conventional one. In this paper, we proposed for a comprehensive review on fuzzy logic and phased locked loop.*

***Keywords*** *- ANFIS, DPLL, FL, PID, PLL.*

## 1. Introduction

The history of Phase Locked Loop (PLL) had been started way back in 1919. From the emergence of PLL, it revolutionized very fast and reached to a critical stage once Integrated Circuit (IC) technology had been invented. The development of PLL was based on the evolution of theory of feedback amplifier. A PLL is a feedback control circuit. It is a self-correcting control system in which one signal pursues another signal. Initially, relatively low frequency PLL was available, but in the advancement of IC technology, the high frequency PLLs became available to use in different applications [1]. As the name suggests, the PLL operates by locking accurately the phase of input signal through the use of its negative feedback path. The PLLs are most widely used in many communication systems like cellular phones, computers, televisions, radios and motor speed controllers, etc., for clock and data recovery or Frequency Synthesis (FS). The FS is currently a very important PLL application area. In demodulation process of Frequency Modulation (FM) and Amplitude Modulation (AM) signals, the PLL are also widely used.

The concept of Fuzzy Logic (FL) has been first devised by Lotfi A. Zadeh, University of California at Barkley in 1965 [2]. It is based on the principle of uncertainty and vagueness. From the imprecision, the FL gives us a conclusion and decision. Fuzzy Systems (FS) are developed on this concept of FL. There are two very important reasons due to which the FS is used, they are: (i) in very complex systems where behavior of the system is difficult to understand, and (ii) when a fast and approximate solution is required in a short span of time [3, 4].

The Adaptive Neuro Fuzzy Inference System (ANFIS) is a technique where neural network and FL based system are amalgamated to device it. Along with neural networks, FL works tremendously to improve the performance and efficiency of a system, as well as solving complex problems.

To study the behavior as well as operations of high frequency PLL, the concept of FL and ANFIS are used by many researchers across the globe. In the proposed work, we proposed to review the work of different research groups which focuses on the study of PLL based on ANFIS.

## 2. Background Study

### *2.1. The Early History and Development of PLL*

In early 1919, Vincent and Appleton had performed an experiment on practical synchronization of oscillators. The concept of PLL was first conceived by de Bellescize, a French engineer, in 1930, but it was not implemented during that time. The research continued till 1940 for synchronization of frequency of local oscillator in FM demodulation and atomic particle accelerator amplifiers. The control theory of PLL was based on feedback amplifier, the technique of which had been analyzed by Bode and Nyquist at Bell Laboratory. Thereafter, many researchers had worked on synthetization technique in oscillator. The scenario had been changed during World War II, when the requirements were changed for communication and some great changes were taken place in control theory. Till the end of 1959, analog PLL theory as well as design reached to the conclusion of three uses, such as: (a) to increase the power level and attenuate the noise of a weak FM signal in a receiver, (b) to reduce the noise of oscillator, and (c) for a narrow Bandwidth (BW) filter. During 1960 to 1975, the PLL

This is an open access article under the CC BY-NC-ND license (http://creativecommons.org/licenses/by-nc-nd/4.0/)

IC became available, and use of PLL in consumer products increased day by day, which creates popularity of use of PLL. At the same time, the optical PLL also emerges in the field of research. The color television had also been developed with the development of PLL technology.

### *2.2. The Basic PLL*

The basic block diagram of PLL consists of three fundamental functional blocks, namely: (i) a Phase Detector (PD), (ii) a Loop Filter (LF), and (iii) a Voltage Controlled Oscillator (VCO) as shown in Figure 1. The PD compares and detects the signal generated in the PLL to the received signal. The output of the PD consists of the double of frequency component of the locking frequency and equaling the phase difference of the two signals. The LF eliminates the unwanted frequency component, and the signal passed through the VCO [5, 6].

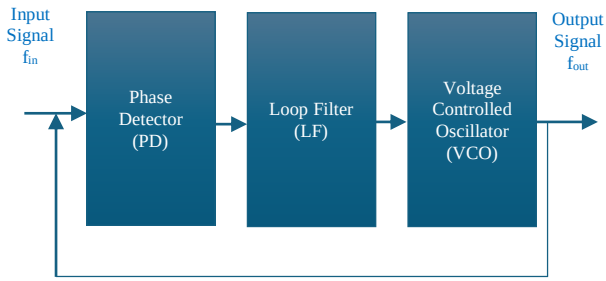


**Fig. 1 The block diagram of a basic PLL**

### *2.3. The Different Types of PLL*

There are three basic types of PLL, such as: (a) Analog or Linear PLL (LPLL), (b) Digital PLL (DPLL), and (c) All Digital PLL (ADPLL). The LPLL is the first PLL which had been developed in the early decade of thirty. It is the standard loop and consists of all analog components. The DPLL had been developed during seventies centuries and consists of both digital and analog components. Usually, the front part consists of digital components, and the back end was with analog components. As the name defines, the ADPLL consists of all digital components. It had been developed after the emergence of DPLL [7, 8].

### *2.4. The Proportional Integral and Proportional Integral Derivative Controller*

The controllers are the core of any complex structure of control systems. Theoretically, the system which chases to minimize the difference between the desired result and the actual result is known as a controller. The operation of controller is depended upon its uses, such as: (i) to minimize the steady state error, (ii) to improve the accuracy, (iii) to reduce the undesired offsets, (iv) to control maximum Overshoot (OS), (v) to reduce the noises, (vi) to speed up the system, etc. Depending upon the modes used, the controllers are split into three kinds, such as: (a)Proportional Integral (PI) controller, (b) Proportional Derivative (PD) controller, and (c) Proportional Integral Derivative (PID) controller, among which PI and PID controllers are largely used in industrial purposes [9, 10]. In the proposed study, the PI and PID controllers are being studied along with FL controller (FLC), where PI and PID controllers are replaced by FLC.

The block diagram of PID controller along with PLL and FLC are shown in Figure 2 and Figure 3, respectively.

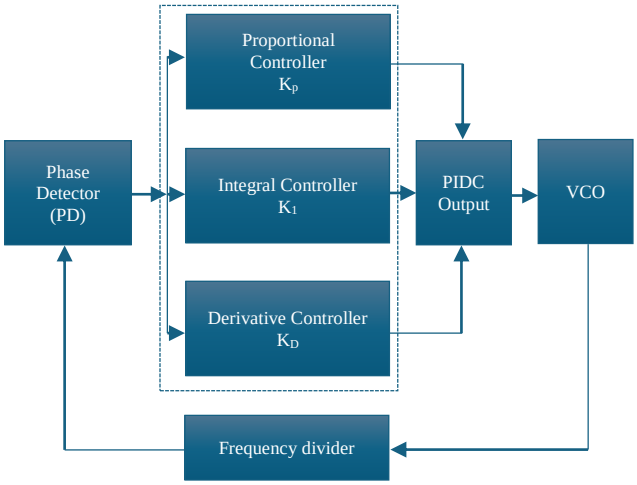


**Fig. 2 The block diagram of the PID controlled PLL**

## 3. The Fuzzy Logic and Fuzzy Inference Systems

The fuzzy sets had been first introduced by Lotfi A. Zadeh during the decade of sixties. In crisp sets, there exists only two groups, either a member or non-member. But in some situations, for some particular characteristics, it is difficult to represent in a particular group. In such a situation, there is a requirement of sets where, apart from these members, non-member concept, there exists a concept of grade of membership.

Fuzzy set theory only explains the degrees of membership or membership functions, that defines the states which can't be explained in crisp sets. FL is very popular and powerful among soft computing techniques. The technique of computation of FL is deals with imprecision and irregularity [11]. The system based on fuzzy set theory, fuzzy reasoning and fuzzy if-then rules is called the Fuzzy Inference System (FIS). The basic components of FIS are fuzzification, rule base system, inference engine and defuzzification process. There are three types of FIS, such as: (a) Mamdani type, (b) Takagi-Sugeno type, and (c) Singleton fuzzy system.

The Adaptive Neuro Fuzzy Inference System (ANFIS) is a neuro fuzzy technique, which is a combination of Neural Network (NN) and FIS. In this hybrid system, the FL deals with the imprecision and uncertainty of the system, and the NN take care of the adaptability of the system [12].

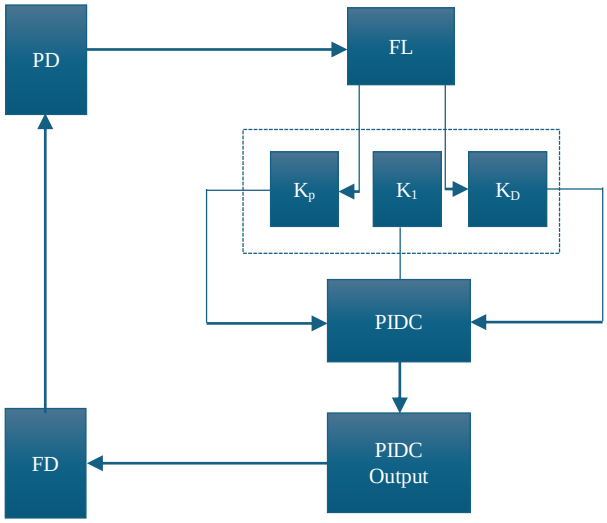


**Fig. 3 FLC controlled PLL**

## 4. The Related Works

To study the behavior and operation of FL integrated PLL due to its dynamic characteristics, numerous researchers had undertaken research work in the last few decades. Some of the research work among those has been reviewed here in the proposed work.

In the year 2005, F. Herzog et al. [13] had presented a novel type of Optical PLL (OPLL), optimized for broadband inter-satellite communication at nano watt signal power levels. In the proposed OPLL for phase locking, the loop does not require the transmission of a residual carrier. Since the OPLL is capable of receiving various signal formats, so it is suitable for broadband inter-satellite communication. It received analog or digital data in various modulation formats.

Herzog et al. in the year 2006 [14] had presented the first complete mathematical analysis of the dither loop, which is novel OPLL that extracts a phase error signal by applying a small sinusoidal phase disturbance to the local oscillator laser and synchronously demodulating the resulting power fluctuation. The LF of the system is explicitly a PI controller. In the context of fuzzy-PLL and adaptive PI/ PID study, this work establishes a benchmark model specifically in real time, where a fuzzy based PI or PID controller performs better by dynamically adjusting gain parameters. There are some gaps which can be improved, such as: the work does not consider noise, does not use any derivative term in the controller and does not used any adaptive control method.

Hasanien in the year 2009 [15] had worked on a standard three phase PLL as the frequency measurement front-end in a High Penetration No-Storage Wind-Diesel (HPNSWD) system to regulate system frequency through secondary load, by switching the PLL derived frequency error into either a PID or a FLC. Here, the PID controller with optimally tuned gains required approximately 5 seconds to restore the 60 Hz reference, followed by a sudden 50 kW load disturbance, which exhibits visible frequency overshoot. It shows the inability to adapt to nonlinear dynamic conditions of the direct consequence of the fixed gain structure. Conversely, the FLC covered directly within the same PLL loop, processing through a seven-level linguistic rule base, achieved steady state in 3 seconds with minimum overshoot and faster load redistribution and without the need of any mathematical plant model integrated into PLL-based feedback loop FLC, which provides superior transient performance over classical PID controller. That also forms a strong motivation for the development of adaptive fuzzy PI/PID and ANFIS-based PLL architectures in modern control applications [15].

Saribulut et al. in 2008 [16] had studied a unified power flow controller, where alternative controllers, such as P, PI, PID and a Takagi-Sugeno FLC, regulated shunt and series converters by using error and error rate inputs to compare their impact on real or reactive power controls. The system stability is evaluated for the controller by considering steady state phase shift conditions under three phase fault conditions.

In their PSCAD/EMTDC simulations, in normal operation, the fuzzy controller consistently achieves higher real power transfer and near zero reactive power than PI and PID controller. With slightly higher overshoot during fault, it offers similar voltage and reactive power recovery.

It had been demonstrated that a properly designed fuzzy controller can outperform fixed parameters of PI and PID regulators in a PLL-assisted power electronics environment and motivating the use of fuzzy PI and PID structures in PLL applications.

Geng et al. in the year 2010 [17] had proposed a concept which is directly applicable to PLL design. They had shown that by keeping phase jitter low in steady state, a hybrid structure can improve lock acquisition speed. They had also suggested a hybrid fuzzy-PI controller for a Voltage Source Converter-High-Voltage Direct Current (VSC-HVDC) system, in which a fuzzy controller handles large errors and a conventional PI controller substitutes near steady state, with a coordinator switching between the two, based on an error threshold. The results of simulation show the hybrid controller settles nearly three times faster than a pure PI controller during a power step and recovers twice as fast after a fault.

Karuppanan at al. in the year 2010 [18] had proposed a conventional PI controlled PLL synchronized shunt Active Power Line Conditioner (APLC) in place of a fuzzy or fuzzy PID PLL system. It meets IEEE-519 standards by using a fixed-gain PI controller at Kp=0.7, Ki=23 along with PLL synchronization, which reduces source current Total Harmonic Distortion (THD) and achieves power factor almost unity in the state of nonlinear and unbalanced loads. In terms of research in PI/PID controlled FPLL, it works as a baseline

at fixed gain, establishing reliable performance with adaptability that could be enhanced exactly with the shortcomings of FL integration into PI/PID PLL.

C. Shan et, al. in the year 2011 [19] had proposed an ADPLL that combines fuzzy control with a PI algorithm to dynamically adjust loop noise bandwidth. It provides a direct reference point for PI and PID controlled PLL design. The authors had first analyzed a second-order DPLL with fixed PI parameters and show that its equivalent noise bandwidth is directly related to the PI gains. A constant bandwidth creates a trade-off. A wide bandwidth gives fast acquisition, but it also produces high phase jitter and poor disturbance rejection. A narrow bandwidth improves interference suppression but slows capture time and reduces capture range. They had introduced a fuzzy PI controller which takes phase error rate as inputs. It tunes an effective bandwidth parameter $B_L$ online and by using a wide bandwidth during acquisition. When it achieves a faster lock in, it switches to a narrow bandwidth. As compared to conventional PI DPLL, it also leads to faster lock in and lower overshoot (from roughly 45% to 18%), better and lower interference as well as smaller phase jitter. The lock in time, jitter and disturbance rejection can be optimized without fixing by static PI/ PID tuning. By using PI or PID and embedding a fuzzy supervisory layer as the underlying LF structure, which adjusts effective bandwidth and also adjusts loop gains according to phase error and its derivative.

P. Karuppanan et al. in the year 2011 [20] had proposed three types of controllers, such as PI, PID and FL, in a shunt cascaded multilevel active power filter to control the DC bus capacitor voltage. They also estimate the peak reference current in the way similar to designing LF for PLLs by using PI/ PID controller. To achieve sinusoidal source currents and improved power factor, PI and PID controllers are used to control the cascaded Voltage Source Inverter (VSI) and triangular sampling current controller. But, a precise mathematical model of the system is needed, as the PI and PID are linear controllers. The FL controller, which applies a Mamdani rule based on seven triangular membership functions to calculate the peak reference current, uses the error and the change of error as its inputs. The simulation results show that all three controllers reduce the source current THD to below 3% in steady state. The simulations show that all three controllers reduce the source current THD to below 3% in steady state, in which the fuzzy controller gives the lowest THD and the highest power factor. This study gives a useful idea for a PI/PID controlled PLL to keep PI or PID as the inner LF structure by adding a fuzzy supervisory layer around the phase error and the control voltage dynamics. The fuzzy layer can help in reducing distortion, improve lock in behaviour and robustness, when the input waveform has many harmonics or is unbalanced, it is helpful. The fuzzy controller can improve PLL performance similar to how it improves the cascaded APLC beyond fixed-gain PI/PID.

Belaidi et al. in the year 2012 [21] had designed a three-phase shunt active power filter that compensates current harmonics and reactive power even when the main voltages are unbalanced. The proposed system uses a PLL based on the park transformation. The PLL extracts the fundamental direct axis voltage component from the supply. A Mamdani type FLC is then used to regulate the DC link voltage. When the supply is unbalanced or distorted with this combination, the system keeps working. In those conditions, the PLL with fuzzy controller still performs correctly even though the standard p-q theory on its own does not work well. The fuzzy controller uses the DC link voltage error as one input and the rate of change of this error as another input, while defining seven linguistic levels as a triangular membership function, which are based on fuzzy rule. After fuzzy interference and subsequent defuzzification to a single crisp value, the output adjusts the energy stored in the DC capacitor in real time, and the controller does not need a precise linear mathematical model of the system. A conventional PI controller usually needs such a model and careful gain tuning. The system had been tested in MATLAB/Simulink, and the THD dropped to 1.89% after compensation. The source current and voltage became almost in phase, and the power factor was corrected close to unity. The DC link voltage stays almost constant with very little ripple, even when the load is unbalanced. It supports the idea of using a two-layer control structure. In this structure, FL controls the nonlinear behaviour in an outer path, and the PLL handles phase synchronization in an inner, almost linear path.

Santos et. al in the year 2012 [22] had handled with the slow synchronization problem of conventional PI-controlled PLLs. Because a normal linear PI PLL needs several grid cycles to phase lock, they replaced it with an adaptive nonlinear PI whose gains change with the phase error like a Gaussian. It makes the controller better when it is close to lock, the error becomes large and gentle. The PLL by using the adaptive nonlinear PI locks about 2.3× faster (0.07 s to 0.03 s) and performs better than a conventional PI under voltage sag, swell, phase jumps, and 35% THD that clearly supports the idea of using PI/PID controlled FPLLs. It clearly shows that a fixed-gain PI controller inside a PLL is not suitable for nonlinear, highly disturbed conditions, while FL solves this by adapting the control action from error and error rate by using simple rules without a plant model. Therefore, the Gaussian nonlinear PI as proposed by Santos et al. can be viewed as an early, mathematical form of fuzzy gain scheduling in the PLL.

Venkatesan et al. in the year 2016 [23] had compared PI and FLC for a three-phase grid-connected PV inverter with a five-level Space Vector Pulse Width Modulation (SVPWM) topology. A PLL synchronized the inverter output with the grid voltage as the controller regulated the d-q current components. The PI controllers need manual tuning and do not work well when conditions change often, while FLC adjust

automatically. The FLC used error and change in error without requiring any mathematical model. The simulation results show that the FLC achieved 1.3% THD against 1.71% with that of PI, with faster dynamic response.

Hannan et al. in the year 2019 [24] had performed a thorough review of FLC-based inverter systems for photovoltaic applications. The conventional PI and PID controllers require well-defined mathematical models and fixed gain tuning, under nonlinear and load disturbance conditions, making them substandard. Through a linguistic rule base, mapping error and modification of error, the FLC overcomes those disadvantages without any plant model. In the inverter control system, the PLL handles frequency synchronization, and the voltage regulation in the d-q frame manages by the FLC. From their study, it is revealed that the FLC attained 2.5% voltage THD and 3.5% current THD. They also observed a significant limitation that membership functions need manual tuning, which requires substantial effort. Hence, as future direction they recommended ANFIS based auto tuning. This briefed gain structure can serve as a systematic starting point for initializing FLC membership functions within the PLL loop, overcoming those identified research gap.

Vukadinović et al. in the year 2019 [25] in their work had presented that, inside a three phase SRF PLL, the PI/ PID controller explicitly replaced with a Hedge Algebra based Controller (HAC), while the conventional PLL uses a PI or PID as its LF. Under unbalanced voltage, harmonics and frequency step changes, this PLL remains ineffective. The HAC is fuzzy like controller and is structured as human language with genetically optimized rule base. Under disproportionate voltage, harmonics and frequency step changes, the system failures. The harmonic components are removed at twice the grid frequency by a Moving Average Filter (MAF) inside the phase loop. The experimental result shows that under unbalanced voltage sag, the HAC reduced Integral of Absolute Error (IAE) by 44% against PID and exceed the fuzzy controller. The HAC produced a maximum phase error which is much lower than that of the PID. It confirms that fuzzy type controller consistently outperforms fixed gain PI/ PID controller.

Zhang et al. in the year 2020 [26] had proposed to handle wide AC and DC voltage ranges by using a double fuzzy PI controller for the voltage outer loop of a reversible three phase PWM converter. A classical PI and single Fuzzy PI unable to maintain good dynamics. The main fuzzy PI adjusts PI gains from DC-link voltage error and its rate. On the other hand, a sub-fuzzy controller in addition modifies gains by using AC side voltage variation and DC reference changes. During sudden load changes at different voltage levels, experimental results reveal reduced DC voltage drop and overshoot and shorter settling times in comparison to the traditional PI and single fuzzy PI. This layered PI fuzzy structure supports the PI/PID controlled FPLL concept, where PI/PID provides a baseline loop, and FL adaptively refines gains under changing operating conditions without a definite linear model.

Saraswat and Suhag in the year 2023 [27] had proposed to combine solar, wind, battery, and grid power and designed a Type-2 FLPID to balance power and hold DC link voltage steady under changing conditions. They had compared it with a Type1-FLPID and a plain PI controller. In their system, for grid synchronization, the grid inverter uses a standard PLL along with the PI controllers running in the inner current loop for PLL for synchronization, PI for the fast inner loop, and FL for the harder outer loop. In accuracy, the fuzzy PID hybrid systems clearly beat general PI, but in real time, it takes more time to tune as compared to PI. The Type 2 FLPID is complex in nature but hardly edges out Type 1 FLPID. It can be concluded that fuzzy enhanced PI/ PID performs better than fixed-gain PI when conditions get complex. But FL is more comprehensive to operate in real time as well as in hardware implementation.

Nouh, Zalam, and Sayed in the year 2024 [28] presented a hybrid FOT2F-FOPD controller, integrating fractional PI with Type-2 FL and a parallel fractional order PD stage, for a sensorless Permanent Magnet Synchronous Motor (PMSM) speed controller. A Synchronous Reference Frame PLL (SRF-PLL) estimates rotor position from the phase error signal in place of a physical sensor. The FL is positioned in the external speed loop instead of inside the PLL's own LF. The tuning is done by using a new optimizer called Intelligible-in-time Logics Algorithm (ILA), and it considerably surpasses plain PI, reducing settling time, overshoot, and steady state error by over 50% under load. This is strong supporting observations that fuzzy enhanced PI/PID exceeds fixed gain PI in PLL integrated systems. However, it should be formulated as an outer loop fuzzy enhancement as an alternative to a direct FPLL loop filter alternative [28].

Maroua et al. in the year 2025 [29] had proposed an FOT2FLC-GA controller, a fractional-order Type-2 FL scheme, which is a combination of Fractional Order (FO) approach and the T2FLC algorithm to obtain a controller characterized by high performance and great durability. It is tuned via Genetic Algorithm (GA), to manage a Photovoltaic system (PV) battery microgrid's shunt active power filter. The PLL extracts voltage or current phase information feeding into the fuzzy-based power control loop. The FL enhances the outer active power control designed above the PLL instead of its internal LF. It still works far better, delivering significant gains, low THD and better performance over standard Type-2 fuzzy controller in terms of improved ripple, overshoot and steady state error. The FL layered on PLL-based systems significantly surpasses PI and fuzzy approaches; however, it remains an outer loop enhancement over a direct PLL LF replacement [29].

Riyas et al. in the year 2025 [30] had reported in their research work that a nature-inspired method called the Pity Beetle Algorithm can tune the PI controller inside a three-phase Synchronous Reference Frame Phase-Locked Loop (SRF-PLL), which is used to synchronize grid-connected systems. They had tested in MATLAB across four sturdy grid conditions: harmonics, unbalanced voltage, phase jump, and unbalanced phases. The results are satisfactory. The PLL locks faster and tracks the phase angle more precisely than other optimization methods and also provide stable Bode plot margin. The authors had demonstrated that their method beats fuzzy PI tuning, but only with older Type-1 fuzzy PI, not modern Type-2 fuzzy PID. However, they did not report hardware tests or steady state THD. For FPLL work, it is a useful fixed gain benchmark which shows that the offline optimized PI can overtake fuzzy PI on static disturbances, still cannot adapt online for changing grids, which is the key advantage of Type-2 FPID controller.

Kamkar et al. in the year 2026 [31] had presented a MATLAB/Simulink study of bidirectional power converters for Vehicle-to-Grid (V2G) and Grid-to-Vehicle (G2V) operation, which is controlled by a conventional SRF-PLL with cascaded fixed gain PI controllers. They had reported a THD of 2.45% for single-battery and 0.93% for parallel-battery operation, which shows that both are within the recommended limit, with the PLL re-synchronizing in about 50 ms across mode transitions. Their work is best treated as a fixed gain PIPLL benchmark. It uses no fuzzy, PID, or adaptive element. Still, it is observed that ANFIS gives better transient response than conventional PI. An interval Type-2 fuzzy shunt converter achieves unity power factor with THD below 3%.

## 5. Discussion

In the proposed work, we have given a comprehensive review of the PLL, PI and PID-controlled PLLs, and PLLs that use FL and ANFIS, from the early optical PLL to the latest fractional order Type-2 fuzzy controllers. From the review of all the applications, such as inter-satellite optical links, GPS and digital PLLs, wind-diesel frequency control, HVDC transmission, grid converters and shunt active power filters, solar inverters, microgrids, motor drives, and bidirectional V2G/G2V converters, it is clear that FL-based control systems has advantages over fixed gain PI/PID controller on accuracy, settling time, THD, power factor, and resilience when the grid is nonlinear, unbalanced, or distorted. From the review of the literature, it is revealed that early fuzzy PI and fuzzy PID design improved transient response and lock in speed over fixed PI/PID. The Hedge algebra and double fuzzy PI schemes further enhanced the performance during distorted and unbalanced grid conditions. More recent Type-2 fuzzy PID and fractional order Type-2 controllers perform even better. Because they can handle the kind of uncertainty which Type-1 fuzzy and fixed PI cannot do. In contrast, from the review on the works of conventional fixed-gain PI-PLL it is clear that when tuned by the Pity Beetle Algorithm or used in bidirectional converters gives acceptable steady-state results and meets international standard harmonic limits. But they cannot adapt in real time when the grid is non-ideal. Notably, in modern power-electronic systems, the fuzzy controller is more often placed in an outer loop on top of a PLL-synchronized inner loop, rather than replacing the LF of the PLL directly. Collectively, the FPLL improves not only accuracy but also enhances the performance of the whole system. The FL accommodates imprecision, vagueness, and parameter uncertainty that conventional PI/PID controller cannot. That is why it becomes more valuable if the PLL-based systems are more complex, such as: especially in GPS, grid synchronization, and power-quality applications. The key challenges which are observed from this review are: the effort needed to tune membership functions manually, which needs expertise of the designer, the heavier computation of Type-2 fuzzy and fractional-order schemes, and the limited flexibility of hardware validation in most of the studies. The future scopes of the studies are: ANFIS-based auto-tuning, real-time Type-2 fuzzy PID PLL implementation, and experimental validation on FPGA.

## 6. Conclusion

We have reviewed the development of phase-locked loops and the application of PI, PID, fuzzy logic, and adaptive control techniques. The review indicates that fuzzy logic can improve settling time, overshoot, phase tracking, and disturbance rejection compared with conventional fixed-gain controllers, particularly under changing operating conditions. However, the improvement depends on the controller design and its application. Manual tuning, computational complexity, and limited hardware validation remain major challenges. The ANFIS-based tuning offers a promising approach to address some of these limitations. Future work may be direct performance comparisons and experimental validation to establish the practical advantages of fuzzy and adaptive PLL controllers.

## References

[1] Donald R. Stephens, *The Early History of Phase-Locked Loops*, Phase-Locked Loops for Wireless Communications, Springer, pp. 1-8, 2002. [CrossRef] [Google Scholar] [Publisher Link]

[2] Lotfi A. Zadeh, "Fuzzy Sets," *Information and Control*, vol. 8, no. 3, pp. 338-353, 1965. [CrossRef] [Google Scholar] [Publisher Link]

[3] Gordon Hayward, and Valerie Davidson, "Fuzzy Logic Applications," *Analyst*, vol. 128, no. 11, pp. 1304-1306, 2003. [CrossRef] [Google Scholar] [Publisher Link]

[4] Timothy J. Ross, *Fuzzy Logic with Engineering Applications*, John Wiley and Sons, 2010. [CrossRef] [Google Scholar] [Publisher Link]

[5] Edward A. Lee, and David G. Messerschmitt, *Phase-Locked Loops*, Digital Communication, Springer, pp. 700-724, 1997. [CrossRef] [Google Scholar] [Publisher Link]

[6] Roland E. Best, *Phase-Locked Loops: Design, Simulation, and Applications*, 4th ed., McGraw-Hill, 2007. [Google Scholar] [Publisher Link]

[7] Basab Bijoy Purkayastha, and Kandarpa Kumar Sarma, *A Digital Phase Locked Loop based Signal and Symbol Recovery System for Wireless Channel*, 1st ed., Springer New Delhi, 2015. [CrossRef] [Google Scholar] [Publisher Link]

[8] Kusum Lata, and Manoj Kumar, "All Digital Phase-Locked Loop: A Survey," *International Journal of Future Computer and Communication*, vol. 2, no. 6, pp. 551-555, 2013. [CrossRef] [Google Scholar] [Publisher Link]

[9] M.A. Johnson, *PID Control Technology*, PID Control, Springer, pp. 1-46, 2005. [CrossRef] [Google Scholar] [Publisher Link]

[10] Ramon Vilanova, and Antonio Visioli, *PID Control in the Third Millennium: Lessons Learned and New Approaches*, 1st ed., Springer London, 2012. [CrossRef] [Google Scholar] [Publisher Link]

[11] Laécio Carvalho de Barros, Rodney Carlos Bassanezi, and Weldon Alexander Lodwick, *A First Course in Fuzzy Logic, Fuzzy Dynamical Systems, and Biomathematics: Theory and Applications*, 2nd ed., Springer, 2017. [CrossRef] [Google Scholar] [Publisher Link]

[12] Mrinal Buragohain, "*Adaptive Network based Fuzzy Inference System (ANFIS) as a Tool for System Identification with Special Emphasis on Training Data Minimization*," Ph. D Thesis, Electronics and Electrical Engineering, Indian Institute of Technology Guwahati, 2008. [Google Scholar] [Publisher Link]

[13] F. Herzog et al., "Optical Phase Locked Loop for Transparent Inter-Satellite Communications," *Optics Express*, vol. 13, no. 10, pp. 3816-3821, 2005. [CrossRef] [Google Scholar] [Publisher Link]

[14] F. Herzog et al., "Optical Phase Locking by Local Oscillator Phase Dithering," *IEEE Journal of Quantum Electronics*, vol. 42, no. 10, pp. 973-985, 2006. [CrossRef] [Google Scholar] [Publisher Link]

[15] Hany M. Hasanien, S.M. Muyeen, and Junji Tamura, "Frequency Control of Isolated Network with Wind and Diesel Generators by using Fuzzy Logic Controller," *2009 International Conference on Electrical Machines and Systems*, Tokyo, Japan, pp. 1-6, 2009. [CrossRef] [Google Scholar] [Publisher Link]

[16] Lütfü Saribulut, Mehmet Tümay, and llyas Eker, "Performance Analysis of Fuzzy Logic based Unified Power Flow Controller," *International Journal of Electrical, Electronic and Communication Sciences*, vol. 2, no. 9, pp. 1807-1812, 2008. [CrossRef] [Google Scholar] [Publisher Link]

[17] Geng Yuancheng, Li Zhixiong, and Zhang Jiangcheng, "Study on a Hybrid Fuzzy-PI Controller Applied to VSC-HVDC System," *2010 2nd International Asia Conference on Informatics in Control, Automation and Robotics*, Wuhan, China, pp. 484-487, 2010. [CrossRef] [Google Scholar] [Publisher Link]

[18] P. Karuppanan, and Kamala Kanta Mahapatra, "A Novel Active Power Line Conditioners using PLL Synchronization and PI Controller," *International Conference on Future Engineering Trends*, Rourkela, India, pp. 145-149, 2010. [Google Scholar] [Publisher Link]

[19] Changhong Shan et al., "All DPLLs based on Fuzzy PI Control Algorithm," *2011 Second International Conference on Mechanic Automation and Control Engineering*, Hohhot, pp. 7150-7153, 2011. [CrossRef] [Google Scholar] [Publisher Link]

[20] P. Karuppanan and Kamalakanta Mahapatra, "PI, PID and Fuzzy Logic Controlled Cascaded Voltage Source Inverter based Active Filter for Power Line Conditioners," *WSEAS Transactions on Power Systems*, vol. 6, no. 4, pp. 100-109, 2011. [Google Scholar]

[21] R. Belaidi, A. Haddouche, and H. Guendouz, "Fuzzy Logic Controller based Three-Phase Shunt Active Power Filter for Compensating Harmonics and Reactive Power under Unbalanced Mains Voltages," *Energy Procedia*, vol. 18, pp. 560-570, 2012. [CrossRef] [Google Scholar] [Publisher Link]

[22] Luciane Agnoletti dos Santos, Maurício dos Santos Kaster, and Sérgio Augusto Oliveira da Silva, "Applying a Nonlinear PID in a Singlephase PLL Control," *2012 IEEE International Conference on Power Electronics, Drives and Energy Systems*, Bengaluru, India, pp. 1-4, 2012. [CrossRef] [Google Scholar] [Publisher Link]

[23] M. Venkatesan et al., "Comparative Study of Three Phase Grid Connected Photovoltaic Inverter using PI and Fuzzy Logic Controller with Switching Losses Calculation," *International Journal of Power Electronics and Drive System*, vol. 7, no. 2, pp. 543-550, 2016. [CrossRef] [Google Scholar] [Publisher Link]

[24] Mahammad A. Hannan et al., "Fuzzy Logic Inverter Controller in Photovoltaic Applications: Issues and Recommendations," *IEEE Access*, vol. 7, pp. 24934-24955, 2019. [CrossRef] [Google Scholar] [Publisher Link]

[25] Dinko Vukadinović et al., "Hedge-Algebra-based Phase-Locked Loop for Distorted Utility Conditions," *Journal of Control Science and Engineering*, vol. 2019, no. 1, pp. 1-17, 2019. [CrossRef] [Google Scholar] [Publisher Link]

[26] Weixuan Zhang et al., "Analysis and Design of a Double Fuzzy PI Controller of a Voltage Outer Loop in a Reversible Three-Phase PWM Converter," *Energies*, vol. 13, no. 15, pp. 1-19, 2020. [CrossRef] [Google Scholar] [Publisher Link]

[27] Ravita Saraswat, and Sathans Suhag, "Type-2 Fuzzy Logic PID Control for Efficient Power Balance in an AC Microgrid," *Sustainable Energy Technologies and Assessments*, vol. 56, 2023. [CrossRef] [Google Scholar] [Publisher Link]

[28] Mohamed Nouh, Belal A. Zalam, and Amged Sayed, "Hybrid FOT2F-FOPD Controller for Permanent Magnet Synchronization Motor based on ILA Optimization with SRF-PLL," *Scientific Reports*, vol. 14, no. 1, pp. 1-25, 2024. [CrossRef] [Google Scholar] [Publisher Link]

[29] Bouziane Maroua et al., "Genetic Algorithm Type 2 Fuzzy Logic Controller of Microgrid System with a Fractional-Order Technique," *Scientific Reports*, vol. 15, no. 1, pp. 1-30, 2025. [CrossRef] [Google Scholar] [Publisher Link]

[30] P. Riyas, and S.A. Lakshmanan, "Optimal Tuning of PI based LF for Three-Phase SRF PLL Synchronization System using Pity Beetle Algorithm under Grid Abnormalities," *Scientific Reports*, vol. 15, no. 1, pp. 1-21, 2025. [CrossRef] [Google Scholar] [Publisher Link]

[31] Poornima S. Kamkar et al., "Bidirectional Power Converter Topologies for V2G and G2V Integration in Smart Grid Systems: Design, Control, and Performance Evaluation," *International Journal of Scientific Research and Technology*, vol. 3, no. 5, pp. 1134-1146, 2026. [Google Scholar] [Publisher Link]